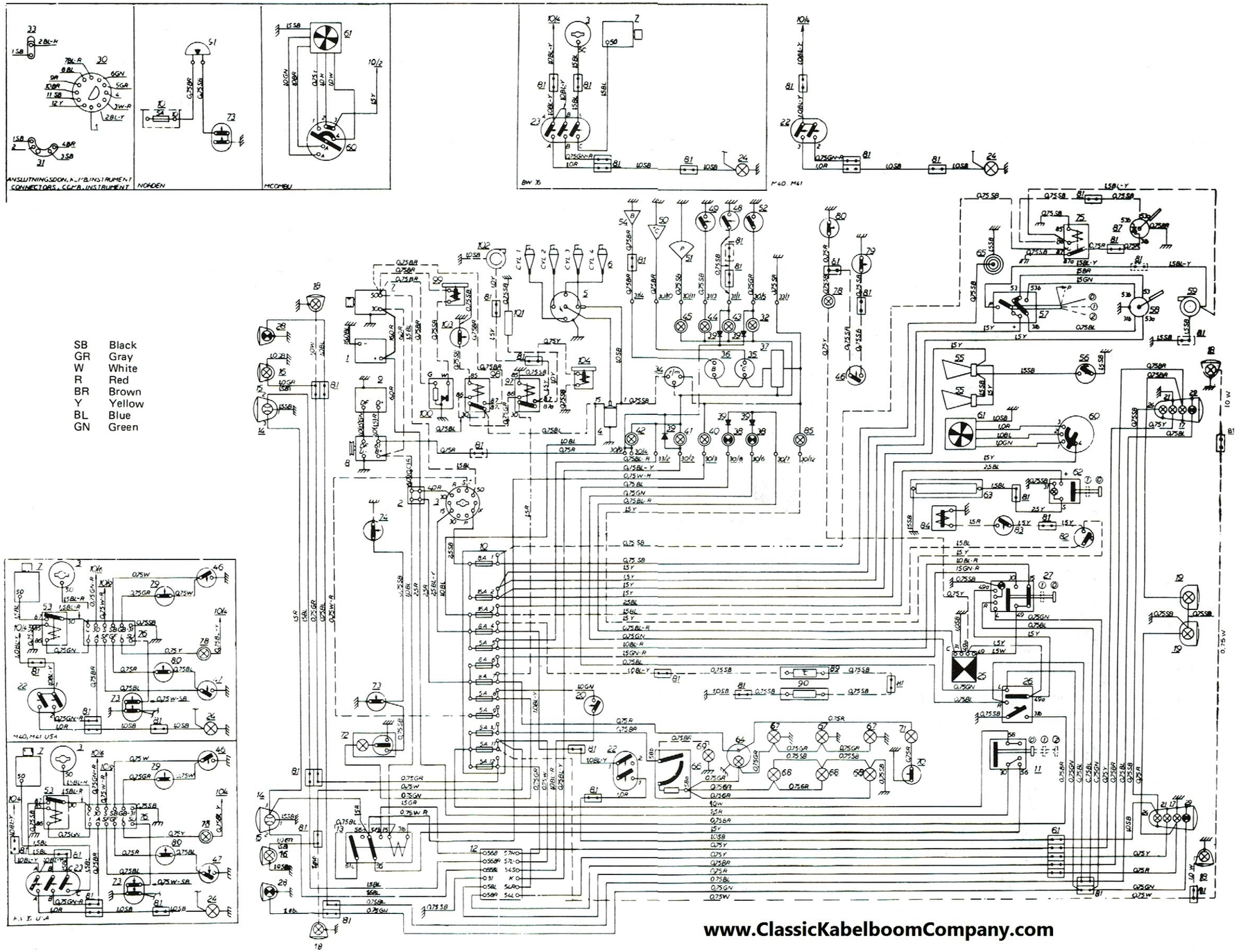

SB	Black
GR	Gray
W	White
R	Red
BR	Brown
Y	Yellow
BL	Blue
GN	Green

1 Battery
2 Connection box
3 Ignition switch
4 Ignition coil
5 Distributor, firing order 1 - 3 - 4 - 2
6 Spark plugs
7 Starter motor
8 Alternator
9 Voltage regulator
10 Fuse box
11 Light switch
12 Bulb Integrity Sensor
13 Switch relay, upper and lower beams
14 Upper beams
15 Lower beams
16 Position light
17 Tail light
18 Side marker light
19 License plate light
20 Stop light switch
21 Stop light
22 Contact on transmission, M40 - M41
23 Contact on transmission BW 35
24 Back-up light
25 Flasher
26 Turn signal switch
27 Hazard warning light switch
28 Front turn signal
29 Rear turn signal
30 Connection at instrument
31 Connection at instrument
32 Brake warning light
33 Connection at instrument
34 Tachometer
35 Temperature gauge
36 Fuel gauge
37 Voltage stabilizer
38 Turn signal control light
39 Diode
40 Upper beam control light
41 Bulb Integrity Sensor warning light
42 Charging warning light
43 Parking brake control light
44 Choke control light
45 Oil pressure warning light
46 Contact, passenger's seat
47 Contact, driver's seat
48 Contact, parking brake
49 Contact, choke
50 Temperature sensor
51 Oil pressure sender
52 Contact, brake warning
53 Starter cut-out relay
54 Fuel gauge sender
55 Horn
56 Horn ring
57 Switch, wiper/washer
58 Wiper
59 Washer
60 Blower switch
61 Blower
62 Switch, electrically heated rear window
63 Electrically heated rear window
64 Clock
65 Cigarette light
66 Instrument light rheostat
67 Instrument light
68 Control panel light
69 Gear shift panel light
70 Contact, glove locker
71 Light, glove locker
72 Interior light
73 Door contact, driver's side
74 Door contact, passenger's side
75 Relay, headlight wiper
76 Interlock Control Unit
77 Buzzer, seat belt
78 Warning light, seat belt
79 Seat belt contact, passenger's side
80 Seat belt contact, driver's side
81 Connection
82 Switch, overdrive M 41
83 Switch for overdrive, on transmission M 41
84 Solenoid for overdrive, on transmission M 41
85 Overdrive control light
87 Headlight wiper
89 Heater pad with rheostat, driver's seat
90 Heater pad, driver's seat
91 Light reminder buzzer
97 Relay, fuel pump
98 Main relay, fuel injection
99 Cold start injector
100 Thermal time switch
101 Control pressure regulator
102 Fuel pump
103 Air flow sensor
104 Auxiliary air valve

www.ClassicKabelboomCompany.com

Wiring diagram for 1974 Volvo 142 and 144